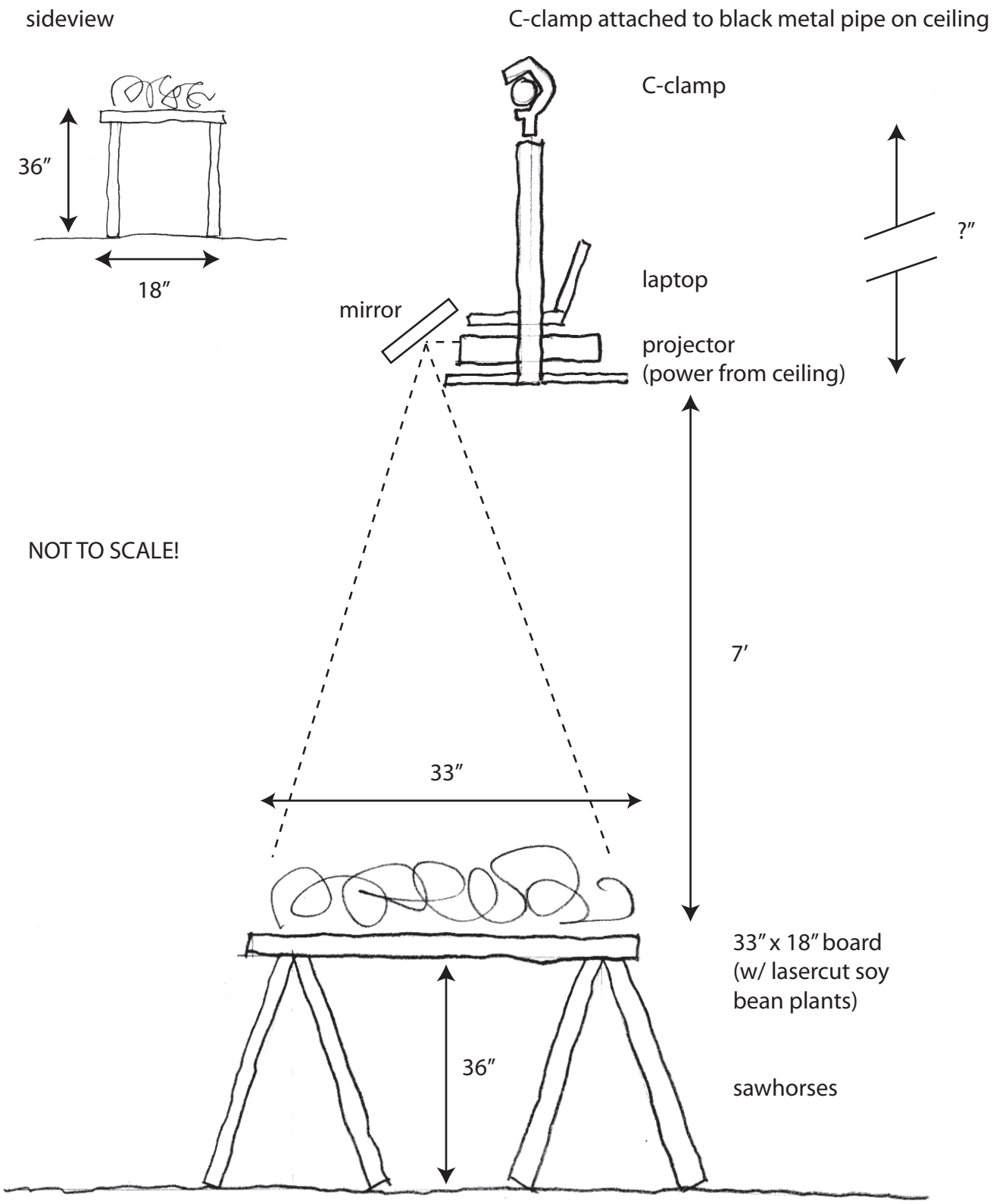Shannon McMullen | Fabian Winkler
Sketch for *National Security Garden*